SUZUKI SV650 Cod. PES109/110/111 - Technical Draw - Brake Side

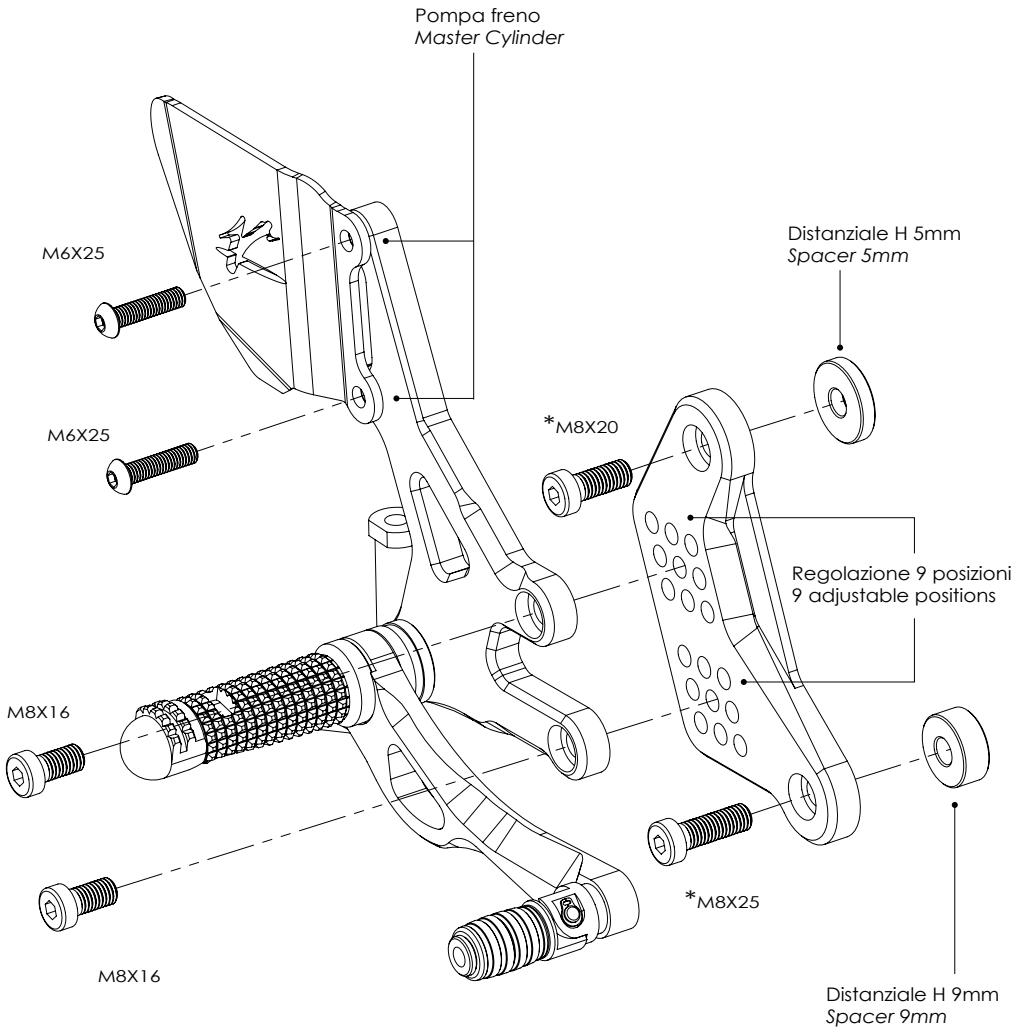

*Avvitare al telaio
(coppia di serraggio consigliata 24/26 N°m)
Bolt on Frame
(24/26 N°m recommended Torque)
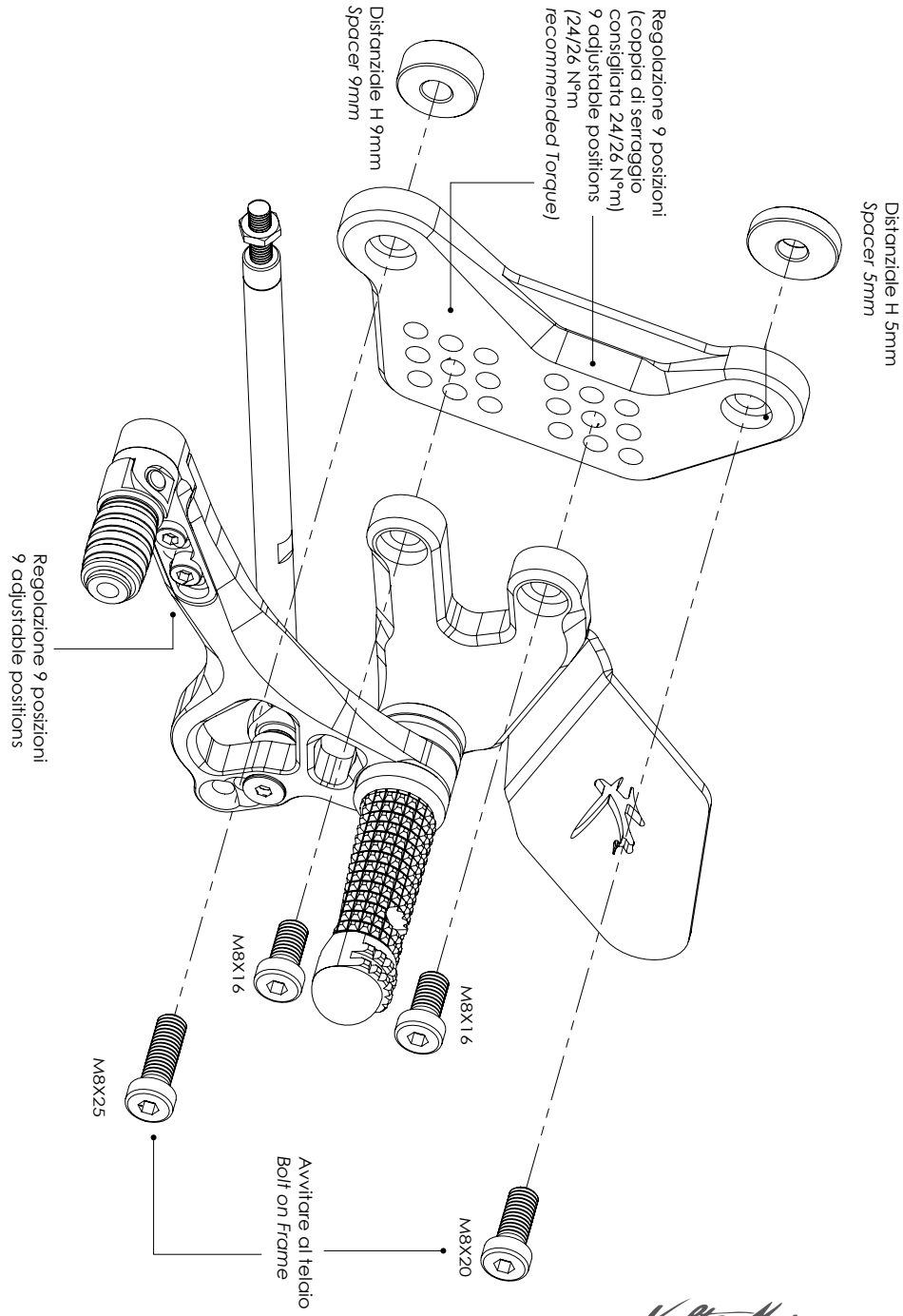
SUZUKI SV650 Cod. PES109/110/111 - Technical Draw - Shift Side